REVISIONS		
	ECO	DATE
A	7499	1-27-82
B'	7702	3-5-83
C'	7895	10-25-83
D'	8555	9-24-85
E	10111	3/22/89

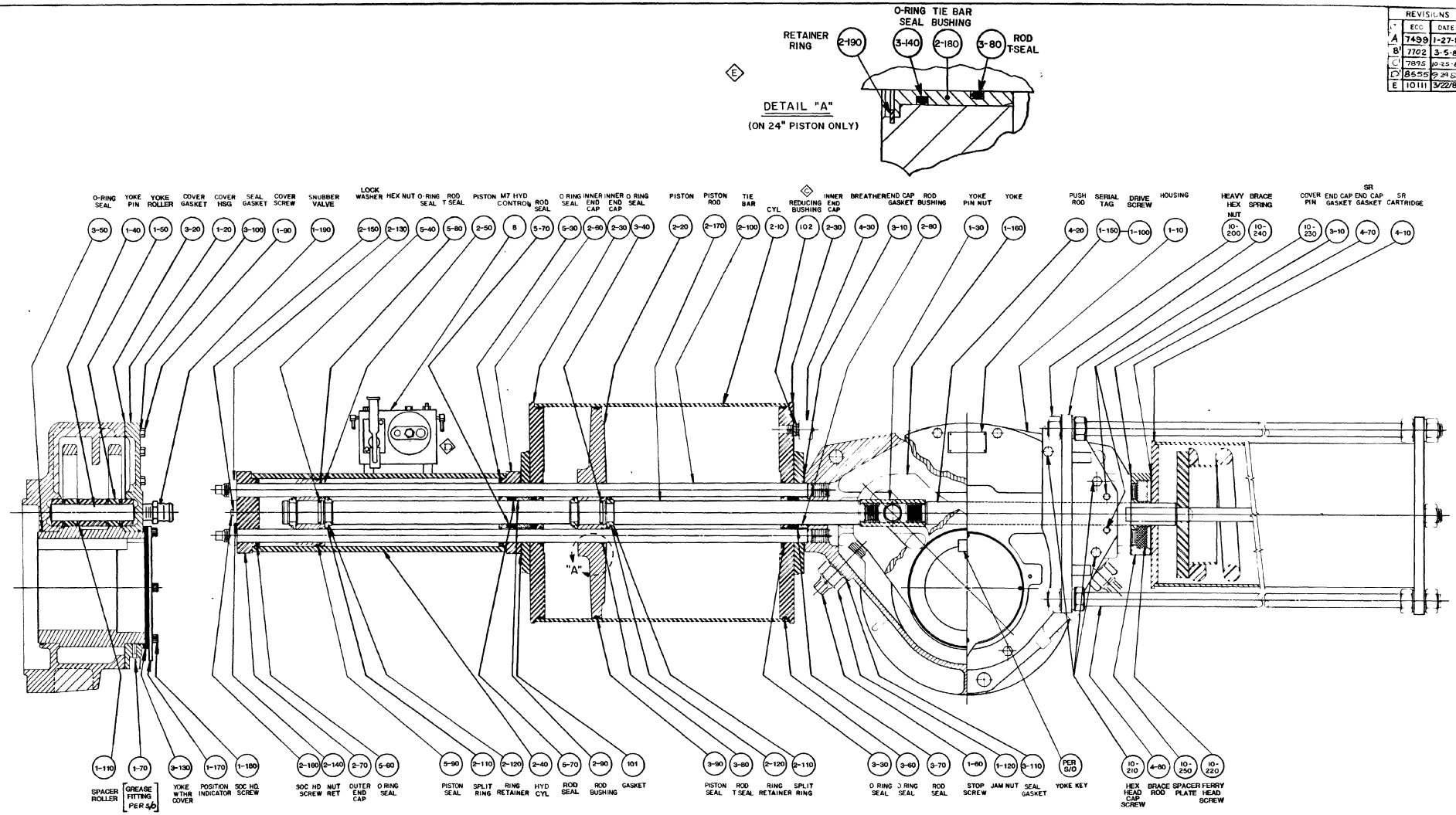

NOTES:

1) SERIAL NUMBER TAG (1-150) TO BE PLACED ON TOP OF HOUSING.

2) ALL PARTS SHOULD BE INSPECTED AND CAREFULLY CLEANED TO REMOVE ALL DIRT AND OTHER FOREIGN MATTER.

3) APPLY GREASE (3-150) LIBERALLY TO ALL COMPONENTS BEFORE ASSEMBLY.

4) INSPECT PER ES-6 (D)

NOT SHOWN

(1-80) PIPE PLUG	(4-60) SOC HD CAP SCREW
(1-130) COVER PIN	(2-230) PIPE PLUG
(4-40) NUT RETAINER	(2240) BLEED VALVE
(4-50) LOCKWASHER	(3-150) GREASE
	(7) TBG & FTGS.

THIS DRAWING CONTAINS CONFIDENTIAL AND PROPRIETARY INFORMATION OF GH-BETTIS AND IS SUBMITTED TO YOU FOR THE LIMITED PURPOSE OF PROVIDING YOU INFORMATION TO FACILITATE YOUR USE AND/OR MAINTENANCE OF PRODUCTS PURCHASED BY YOU FROM GH BETTIS BY RECEIVING THIS DOCUMENT YOU AGREE NOT TO USE SUCH AN IDENTIAL INFORMATION FOR ANY PURPOSE OTHER THAN THE LIMITED PURPOSE STATED HEREIN AND FURTHER AGREE NOT TO DISCLOSE ANY INFORMATION OTHERS EXCEPT IN ACCORDANCE WITH THE LIMITED PURPOSE STATED HEREIN

MATERIAL PER ESMA-
FINISH PER ES
APPROX WEIGHT= LBS
MARK WITH PART NO & LATEST REVISION

GENERAL TOLERANCES UNLESS OTHERWISE SPECIFIED

	IN	MM
DECIMAL		
X	±.010	±2.54
XX	±.030	±.762
XXX	±.015	±.381
ANGULAR	±	
CONCENTRICITY	.005 ± .0	.127 ± .0
FILLETS	.1 N	.1949

DWN	[signature]	DATE 1-27-82
CHK	[signature]	2-25-82
APP'D	[signature]	3-12-82
APP'D		
SURFACE FINISH	125	REMOVE BURRS AND SHARP EDGES
DO NOT SCALE DWG		

TITLE
ASSEMBLY DWG
T5XX-SR(CCW)-M7
ACTUATOR

GH BETTIS
A Galveston-Houston Company

SO No	LO No	PART No. 48101
SCALE NONE	DWG SIZE	SHEET 1 OF 1
		REV E

48101